NATIONAL SPEECH & DEBATE ASSOCIATION
NATIONAL FORENSIC LEAGUE

2022-2023

PRINT AND DIGITAL

ADVERTISING AND PROMOTIONAL OPPORTUNITIES

Effective 10/18/2022

NATIONAL SPEECH & DEBATE ASSOCIATION
NATIONAL FORENSIC LEAGUE

ABOUT THE NATIONAL SPEECH & DEBATE ASSOCIATION:

The National Speech & Debate Association is the largest interscholastic speech and debate organization serving middle school, high school, and collegiate students in the United States. The Association provides competitive speech and debate activities, high-quality resources, comprehensive training, scholarship opportunities, and advanced recognition to more than 140,000 students and coaches every year. For more than 90 years, the National Speech & Debate Association has empowered nearly two million members to become engaged citizens, skilled professionals, and honorable leaders in our society. For more information, visit *www.speechanddebate.org*.

MISSION:

The National Speech & Debate Association connects, supports, and inspires a diverse community committed to empowering students through speech and debate.

VISION:

We envision a world in which every school provides speech and debate programs to foster each student's communication, collaboration, critical thinking, and creative skills.

Learn more at *www.speechanddebate.org*

Rostrum

Rostrum is the official magazine of the National Speech & Debate Association. This quarterly magazine provides the speech and debate community with news, scholarly articles, and national updates. As a dedicated publication for the speech and debate community, it is the source for professionals to learn and innovate in their careers and for students to get introduced and thrive in the speech and debate community.

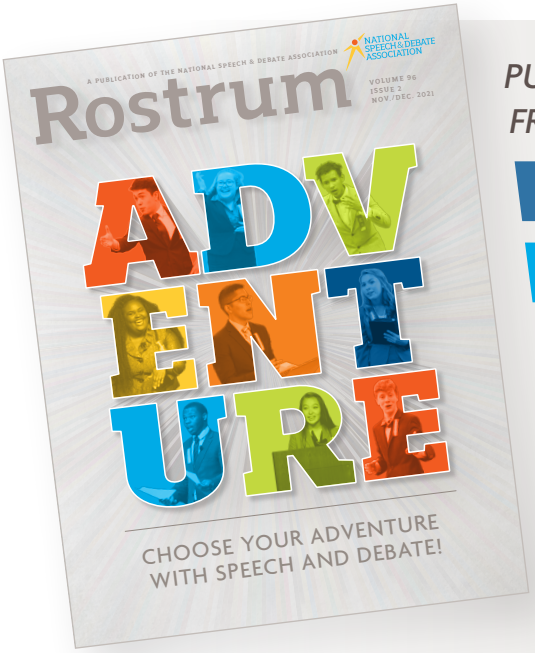

PUT YOUR BRAND AND MESSAGE IN FRONT OF THIS KEY AUDIENCE:

3,500 HIGH SCHOOLS

600 MIDDLE SCHOOLS

5,200 COACHES

150,000 STUDENTS

DISTRIBUTION:

30,000 COPIES MAILED PER YEAR

5,000 PER ISSUE

26,000 ONLINE VIEWS PER YEAR

ROSTRUM MAGAZINE PUBLISH DATES AND DEADLINES

Issue	Publish Date	Ad Submission Deadline
September/October 2022	**September 15, 2022**	August 15, 2022
November/December 2022	**November 15, 2022**	October 14, 2022
February/March 2023	**February 15, 2023**	January 13, 2023
April/May 2023	**April 15, 2023**	March 15, 2023

Deadline Information: *Ads received by or before the submission deadline will be invoiced at the regular rate. Ads received after the submission deadline will be invoiced at the rush rate.*

▶ PRINT PUBLICATIONS

ROSTRUM RATE CARD AND AD SPECS

updated 08/06/19

	Price per Ad	Ad Dimensions: Without Bleed	Ad Dimensions: With Bleed
Full Color Ads			
Full page, *best possible placement* ★ *most popular*	$600		
Full page, *advertiser specified page or location*	$700		
Inside front cover *(IFC)*	$2,000	7.625" W x 10.125" H	8.875" W x 11.375" H
Inside back cover *(IBC)*	$2,000		
Outside back cover *(OBC)*	$5,000		
Half page, *horizontal*	$475	7.625" W x 4.5" H	8.875" W x 5" H
Additional Fees and Services			
Rush rate fee *(ads rec'd after submission deadline)*	+$100		
Design Fee *(optional)*	+$125		

Covers are sold on a first come, first served basis and may be subject to availability. We attempt to place every ad in an attractive, viable position.

HELPFUL HINTS
Fractions to Decimal Inches

1/8"	.125"	5/8"	.625"
3/8"	.375"	7/8"	.875"

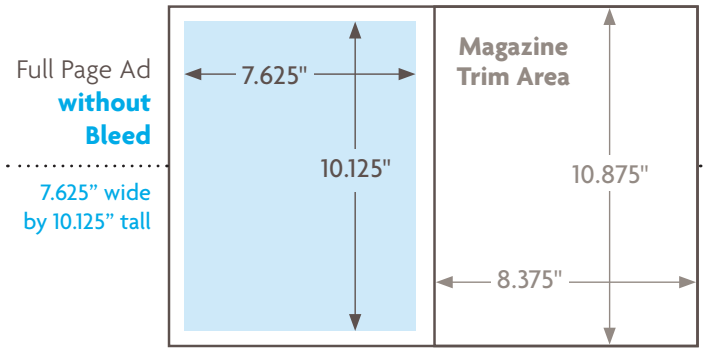

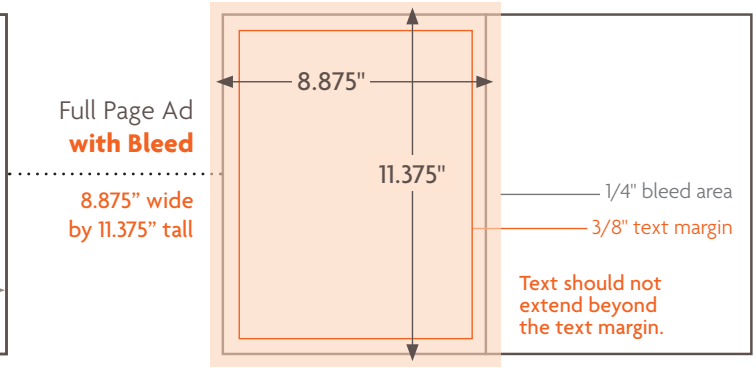

FORMAT

PDF is the preferred format for *Rostrum* ad submissions. Please ensure that all fonts and high-resolution (300 dpi) logos and graphics are embedded. *(Note: It may be helpful to send the original ad setup along with the PDF.)* Please email your ad along with any instructions to Nicole Wanzer-Serrano at *nicole.wanzer-serrano@speechanddebate.org.*

BLEED VS. TRIM AREA

An ad **with Bleed** means that, instead of having a "blank" white margin around the outside of an ad, the ad will print all the way to the edge of the paper (it will "bleed off the page"). Bleed is achieved by extending the artwork or design on a larger sheet of paper, which is then cut down to the final size, or **trim area**.

The **Trim Area** of *Rostrum* is 8.375" wide by 10.875" tall. The **bleed area** of an additional 0.25" all the way around. Due to the nature of the trimming process, we require a 0.375" **text margin** within the trim area of ads with bleed. For example, you would not want a crucial phone number, website address, or other text to be cut off near the edge of your ad.

REMINDER: DON'T FORGET TO PROOFREAD!

For example, "Lincoln-Douglas" should be hyphenated, but "LD" should not. "Student Congress" is now called "Congressional Debate."

DESIGN FEE INFORMATION

Copy and images to be provided by the advertiser. Purchase of stock photography or illustrations are not included in ad fee. Photo editing or special effects may incur an additional fee.

Electronic Newsletters

Each month, the National Speech & Debate Association sends emails to thousands of coaches and students. These newsletters allow for a banner ad from an advertiser. The ad will be a banner design with a clickable link to your URL.

WEEKLY COACH NEWSLETTERS, each received by more than:

5,200 NSDA MEMBER COACHES

44% OPEN RATE | **23% CLICK THROUGH RATE**

MONTHLY STUDENT NEWSLETTERS, received by more than:

55,000 NSDA STUDENT MEMBERS

33% OPEN RATE | **17% CLICK THROUGH RATE**

Newsletter Banner Ad

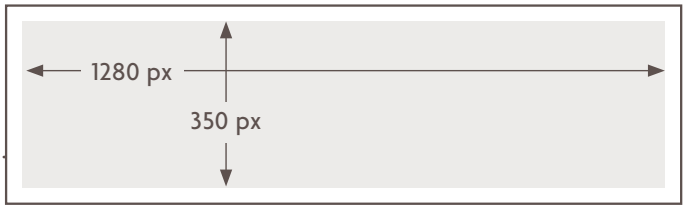

NEWSLETTER ADVERTISEMENTS RATE CARD AND AD SPECS*

	Bulk Discounts *(price per ad)* 2+ Ads	1 Ad	Ad Dimensions
Coach Newsletter *(weekly)* Banner Ad(s)	$350/each	$450/each	1280 pixels x 350 pixels
Student Newsletters *(monthly)* Banner Ad	–	$750/each	1280 pixels x 350 pixels
Additional Fees and Services NSDA Design Fee *(optional)*	+$50		updated 08/06/19

**Advertisements on Tabroom and in the newsletters must be paid for before they are placed online.*

FORMAT

PDF or JPG are the preferred formats for digital ad submissions. Please ensure that your ad is saved to the correct dimensions and at 72 dpi. Also, export your graphics in RGB color space for optimal viewing. Please email your ad with instructions to *nicole.wanzer-serrano@speechanddebate.org.*

DESIGN FEE INFORMATION

Copy and images to be provided by the advertiser. Purchase of stock photography or illustrations are not included in ad fee. Photo editing or special effects may incur an additional fee.

Tabroom.com

Tabroom, a project of the NSDA, is a tournament management system for speech and debate tournaments worldwide.

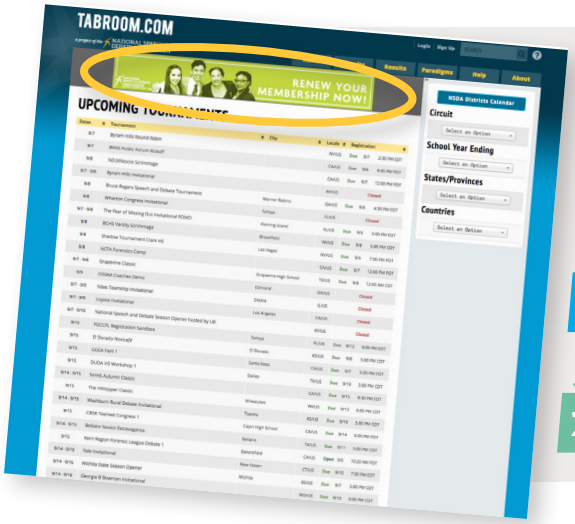

THE AD INCLUDES A CLICKABLE LINK TO YOUR URL.

▶ *www.tabroom.com*

MILLIONS OF VIEWS PER MONTH

OCTOBER TO MAY — PEAK TIME

6 MILLION - 10.5 MILLION PAGE VIEWS PER MONTH

JUNE TO SEPTEMBER — OFF PEAK

2.5 MILLION - 6 MILLION PAGE VIEWS PER MONTH

TABROOM ADVERTISEMENTS RATE CARD AND AD SPECS*

	Pricing per Month Long Ad	Ad Dimensions
One-Month Ads *(Peak Time, October-May)*	$1,000/each	100 pixels x no more than 700 pixels
One-Month Ads *(Off Peak, June-September)*	$500/each	100 pixels x no more than 700 pixels
Additional Fees and Services NSDA Design Fee *(optional)*	+$50	updated 08/06/19

**Advertisements on Tabroom and in the newsletters must be paid for before they are placed online.*

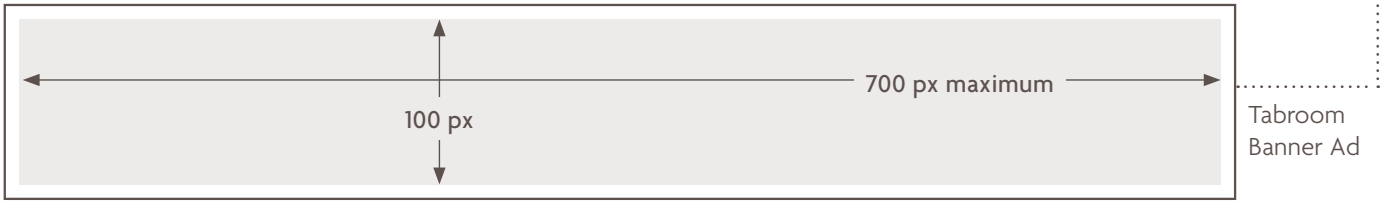

FORMAT

PDF or JPG are the preferred formats for digital ad submissions. Please ensure that your ad is saved to the correct dimensions and at 72 dpi. Also, export your graphics in RGB color space for optimal viewing. Please email your ad with instructions to *nicole.wanzer-serrano@speechanddebate.org.*

DESIGN FEE INFORMATION

Copy and images to be provided by the advertiser. Purchase of stock photography or illustrations are not included in ad fee. Photo editing or special effects may incur an additional fee.

▶ OTHER MARKETING SERVICES

Mailing Lists

> ***Purchase the mailing addresses of our active member schools for your advertising campaigns.*** *Please note that only the postal mailing addresses of current member schools are available. We do not provide coach or member addresses, nor email addresses or phone numbers.*

LIST OPTIONS updated 08/06/19	High School Membership List	Middle School Membership List
Mailing Addresses	▼	▼
Current School Members	$1,000	$500

▶ CONTACT US!

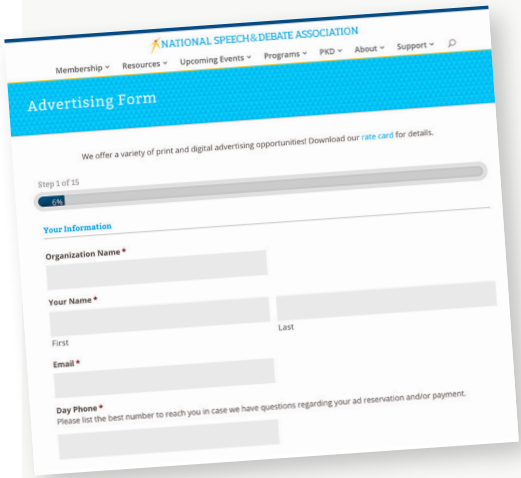

RESERVE YOUR AD PLACEMENT!

Visit our website and fill out our Advertising Form.
You can find the form on our Publications page, under the Resources tab, or by following this direct link:

▶ **www.speechanddebate.org/advertising-form**
or email nicole.wanzer-serrano@speechanddebate.org

PAYMENTS

All payments must be received by the submission deadline specified in this rate card. You may send a check or pay online by credit card (Amex, Discover, MasterCard, Visa). Your email confirmation will serve as the invoice. *Note: All advertising rates are subject to deadlines and timely payment. A late fee of $50 per month will be assessed for invoices not paid within 30 days.*

QUESTIONS?

Have other questions about advertising opportunities, or interested in expanding your marketing presence by becoming a sponsor of the National Speech & Debate Association? Email *nicole.wanzer-serrano@speechanddebate.org.*

NICOLE WANZER-SERRANO, CFRE
Director of Development
nicole.wanzer-serrano@speechanddebate.org

Advertising Tips

> *The overall effect that you would like to create for your print ad is one that provides all the useful information but also helps readers see themselves as satisfied customers. That's a better state of mind for buying your products and services!*

MAKE SURE YOUR HEADLINE HAS STOPPING POWER.

Create an attention-grabbing headline. It's that simple. Intrigue them and focus on what you want them to do after reading your advertisement.

YOUR ADVERTISEMENT SHOULD NOT BE JUST ABOUT YOU.

Talk to your customers about what matters in their lives and their needs. Not you. So don't waste valuable ad space talking about you. Help them understand how or why you can help them.

FOCUS ON ONE MESSAGE.

Stay focused on your main point and don't take the readers off on a bunch of tangents. Don't overload the ad with every benefit and feature of your offering.

MAKE SURE YOU HAVE A CALL TO ACTION.

Give the buyer a sense of urgency. Go ahead and tell them how to get what you're offering and tell them to get it NOW. Visit your website, download your free sample, use your discount code. Give them an easy way to reach out. Give them a reason to do it now, rather than a few weeks from now.

SAY IT VISUALLY.

The visual you select for your ad is critical. It should reinforce your story and be sized appropriately to be seen without effort. Ask yourself, "What visual would communicate the message but also surprise the reader?" That's a winner.

BE CONSISTENT WITH YOUR BRAND.

Use fonts and colors people already identify with your brand. Maintain consistency in your ads' appearance so readers will recognize your ads before reading them.

WHITE SPACE IS YOUR FRIEND.

Focus the reader's attention on the ad, emphasizing the headline and graphic. Crowded ads lose their desired impact and blend into the page. Use a bullet-point list, which makes the ad easy to read.

DON'T SAY TOO MUCH—BE SHORT AND SWEET.

After crafting your headline, write potential copy you want to include in your ad. Now cut it in half. It's a painful process but it forces you to really think through your message. After you cut it in half, cut it again by a third so it's boiled down to the core message. Stick to one key message.

NATIONAL SPEECH & DEBATE ASSOCIATION

NATIONAL FORENSIC LEAGUE

www.speechanddebate.org

6600 Westown Parkway, Suite 270 | West Des Moines, IA 50266

(920) 748-6206

www.facebook.com/speechanddebate

www.twitter.com/speechanddebate

www.instagram.com/speechanddebate

www.linkedin.com/organization-guest/company/national-speech-and-debate-association